RoHS COMPLIANT

ECX-64 SMD CRYSTAL

The ECX-64 is a miniature SMD Crystal with a 6 x 3.5 mm 4 pad footprint. This cost effective package with a height of 1.1 mm is ideal for densely populated PCB applications

Request a Sample

ECS INC INTERNATIONAL®

ECX-64 SMD CRYSTAL

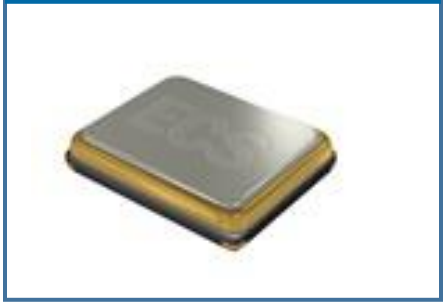

- Compact and Low Profile
- Industry Standard Footprint
- Extended Temp. Range Option
- RoHS Compliant
- 6 x 3.5 mm (4 Pad)

OPERATING CONDITIONS / ELECTRICAL CHARACTERISTICS

PARAMETERS	CONDITIONS	ECX-64			UNITS
		MIN	TYP	MAX	
Frequency		7.3728		50.000	MHz
Mode of Oscillation	Fundamental				
Frequency Tolerance*	@ +25°C			± 30	ppm
Frequency Stability*	-10 ~ +70°C			± 50	ppm
Shunt Capacitance	Co			7	pF
Load Capacitance	Specify in P/N	10	20	Series	pF
Drive Level	DL			100	µW
Operating Temperature*	Topr	-10		+70	°C
Storage Temperature	Tstg	-55		+125	°C
Aging (First Year)	@ +25°C ±3°C			±5	ppm

DIMENSIONS (mm)

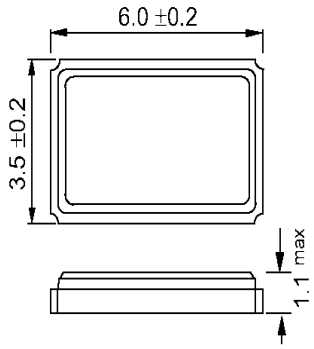

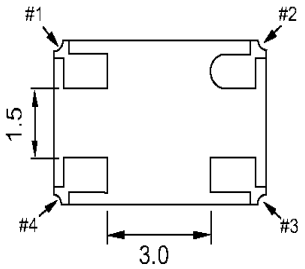

Frequency (MHz)	ESR Ω Max.
7.3728 ~ 7.999	120
8.000 ~ 9.999	60
10.000 ~ 13.999	50
14.000 ~ 19.999	40
20.000 ~ 50.000	30

Figure 1) *Top, Side, and Bottom*

Crystal is symmetrical, pad 1 & 2 are interchangeable. Chamfer on the bottom pad has no electrical significance.

Pad Connections	
1	In/Out
2	Gnd
3	Out/In
4	Gnd

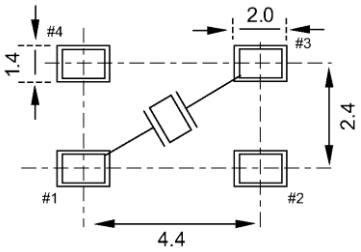

Figure 2) *Suggested land*

PART NUMBERING GUIDE: Example ECS-200-20-23B-TR

ECS -	FREQUENCY ABBREVIATION	LOAD CAPACITANCE	PACKAGE	AVAILABLE OPTIONS			PACKAGING
				Tolerance	Stability	Temp Range	
ECS	200 = 20.000 MHz See P/N Guide	20 = 20 pF S = Series	23B = ECX-64	Blank = Std A = ± 25 ppm J = ± 20 ppm R = ± 15 ppm C = ± 10 ppm	Blank= Std D= ±100 ppm E = ± 50 ppm G = ± 30 ppm H = ± 25 ppm T = ± 20 ppm † W = ±15 ppm † K = ± 10 ppm †	Blank= Std L = -10 ~ +70°C M = -20 ~ +70°C Y = -30 ~ +85°C N = -40 ~ +85°C P = -40 ~ +105°C S = -40 ~ +125°C U = -55 ~ +125°C	TR = Tape & Reel 1K/Reel

* Specify available options in P/N.

† Contact ECS for availability over extended temp range.

Rev.2022

15351 West 109th Street | Lenexa, KS 66219 | Phone: 913.782.7787 | Fax: 913.782.6991 | www.ecsxtal.com

POCKET TAPE DIMENSIONS (mm)

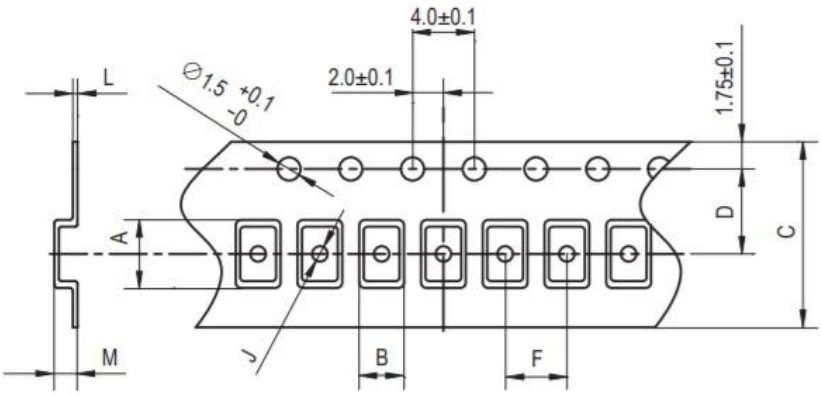

A	B	C	D	F	J	L	M	Reel Dia.	Qty/Reel
6.4	3.9	12.0	5.5	8.0	1.5	0.3	1.5	178	1000pcs

DEVELOPED FREQUENCIES	
Abbreviation	Frequency (MHZ)
73	7.3728
80	8.000
100	10.000
120	12.000
147.4	14.7456
160	16.000
200	20.000
240	24.000
250	25.000
270	27.000
286.36	28.636
400	40.000

SOLDER PROFILE
Peak solder Temp +260°C Max 10 sec Max.
2 Cycles Max.
MSL 1, Lead Finish Au

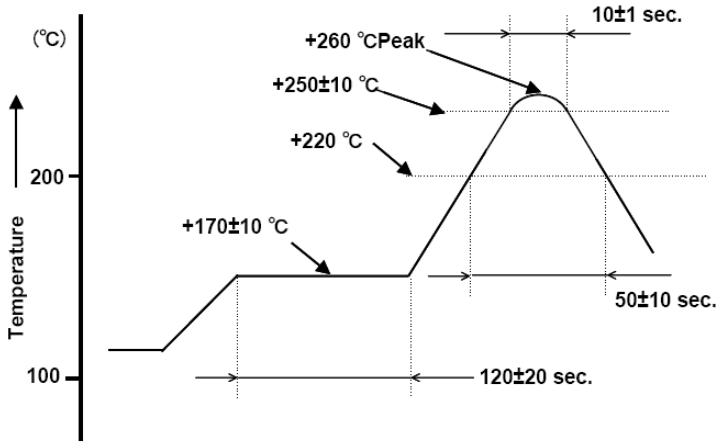

Figure 1) *Suggested Reflow Profile*